CH-RES18-230VO + CH-RSH18MCT1W

Job Name:	**Date:**
Location:	**Approval:**
Engineer:	**Construction:**
Submitted to:	**Unit #:**
Submitted by:	**Drawing #:**
Reference:	

KEY FEATURES:

- Dip Swith 6k to 12K Btu
- Refrigerant Sensor
- GoldFin Anti-Corrosive Coating
- Humidity Sensor
- Built-in Circuit Breaker
- Built-in water pump
- Smart Kit Built-in

NOTES:

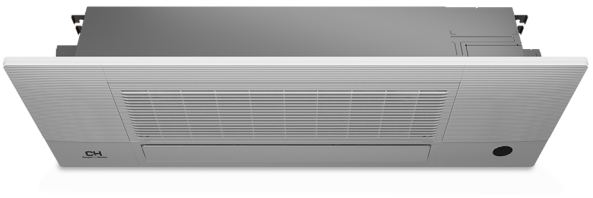

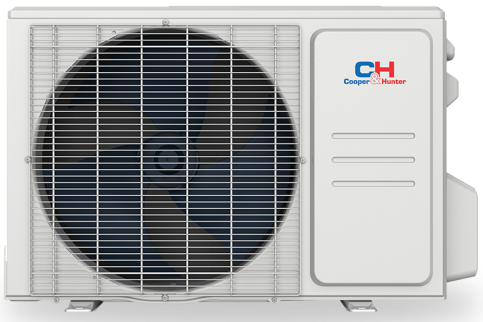

Cooper&Hunter products are subject to continuous improvements. Cooper&Hunter reserves the right to modify product design, specifications and information in this data sheet without notice and without incurring any obligations. Actual unit design may differ from images shown in this submittal sheet.

CH-RES18-230VO + CH-RSH18MCT1W

Indoor Model			**CH-RSH18MCT1W**
Power supply		V, Ph, Hz	208-230V, 1Ph, 60Hz
Communication wiring			AWG 14-4
Cooling	Capacity	Btu/h	18,000 (4,000~18,800)
	Input	w	1,440 (450~1,660)
	Rated current	A	6.4 (2.1~7.3)
	EER/EER2	Btu/w	12.5
	SEER/SEER2	Btu/w	22.2
Heating at 47 °F	Capacity	Btu/h	18,000 (7,600~22,800)
	Input	W	1,600 (400~1,880)
	Rated current	A	7.1 (2.2~8.3)
	COP	W/W	3.3
	HSPF4/HSPF2-4		12.2
	HSPF5/HSPF2-5		8.6
Indoor fan motor		Qty	1
		Input	30
		RLA	1.2
Indoor air flow (Turbo/Hi/Med/Lo) (No duct)		CFM	400.2 / 352 / 300.2 / 207.2
ESP (range)		In.wg.	/
Indoor noise level (Hi/Med/Lo)		dB(A)	44/41/29.5
Dehumidification		L/H	4.40
Indoor unit	Dimensions (WxDxH)	inch	50.31 x 13.19 x 8.98
	Packing (WxDxH)	inch	57.60 x 22.48 x 22.64
	Net/Gross weight	lbs	45.19/82.89
Drainage water pipe diameter		inch	3/4"
Refrigerant piping (Liquid side/Gas side)		inch	1/4"/1/2"
Design pressure		PSIG	550/340
Controller			wire controller + remote controller available
Room temperature	Cooling	F	60~90
	Heating	F	32~86

Cooper&Hunter products are subject to continuous improvements. Cooper&Hunter reserves the right to modify product design, specifications and information in this data sheet without notice and without incurring any obligations. Actual unit design may differ from images shown in this submittal sheet.

CH-RES18-230VO + CH-RSH18MCT1W

Outdoor Model			CH-RES18-230VO
Power supply		V, Ph, Hz	208-230V, 1Ph, 60Hz
Min. circuit ampacity		A	18
Max. fuse		A	20
Compressor	Model		KSN140D58UFZ
	Type		ROTARY
	Brand		GMCC
	Capacity	Btu/h	14,720
	Input	w	1,090
	Rated current (RLA)	A	10
	Refrigerant oil	oz	VG74 14.9
Outdoor fan motor	Qty		1
	Input	w	80
	RLA	A	0.9
	Speed	r/min	780/700/550
Outdoor air flow (Max)		CFM	1,765.8
Outdoor noise level (Max)		dB(A)	57.5
Throttle type			EXV+Throttle valve
Outdoor unit	Dimensions (WxDxH)	inch	35.04 x 13.46 x 26.5
	Packing (WxDxH)	inch	39.17 x 15.67 x 29.13
	Net/Gross weight	inch	92.59/100.31
Refrigerant	Type		R454B
	Precharge	ft	25
Additional charge for 1/4 inch liquid pipe		oz	0.16
Additional charge for 3/8 inch liquid pipe		oz	/
Refrigerant piping	Liquid side/Gas side	inch	1/4"/1/2"
	Max. pipe length	ft	98.4
	Max. difference in level	ft	65.6
Ambient temperature	Cooling	F	-13 ~ 122
	Heating	F	-13~75

Cooper&Hunter products are subject to continuous improvements. Cooper&Hunter reserves the right to modify product design, specifications and information in this data sheet without notice and without incurring any obligations. Actual unit design may differ from images shown in this submittal sheet.

Installation place

(unit: inch/mm)

Perspective A

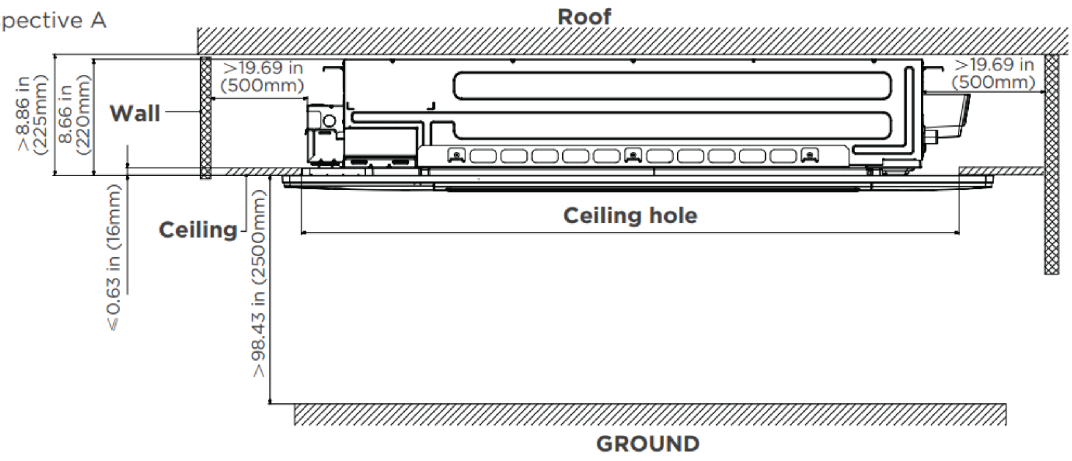

Perspective B

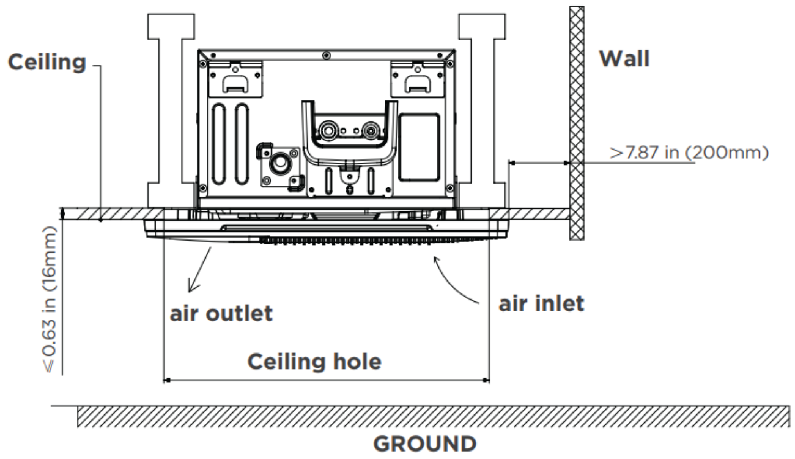

Cooper&Hunter products are subject to continuous improvements. Cooper&Hunter reserves the right to modify product design, specifications and information in this data sheet without notice and without incurring any obligations. Actual unit design may differ from images shown in this submittal sheet.

CH-RES18-230VO + CH-RSH18MCT1W

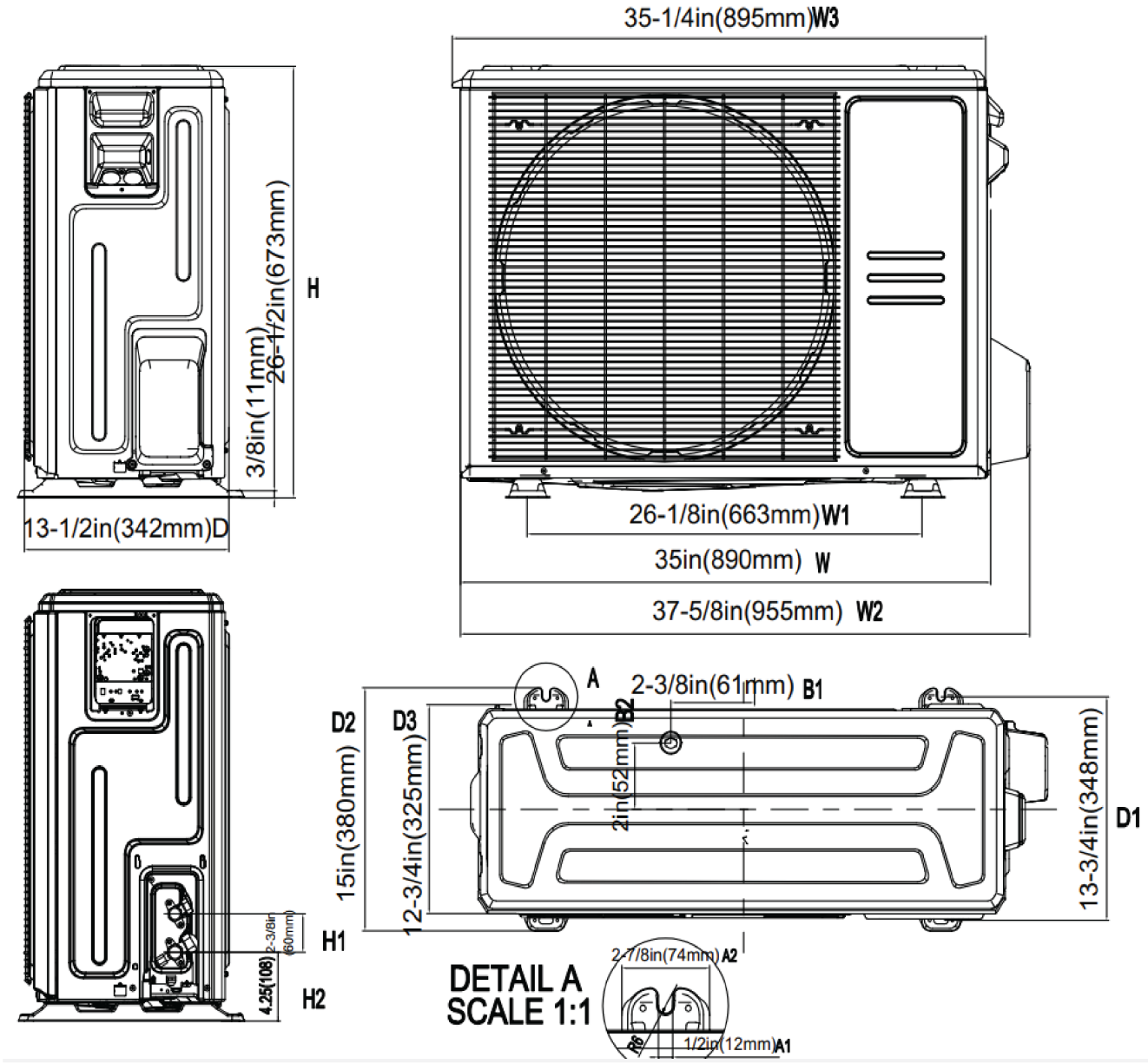

Cooper&Hunter products are subject to continuous improvements. Cooper&Hunter reserves the right to modify product design, specifications and information in this data sheet without notice and without incurring any obligations. Actual unit design may differ from images shown in this submittal sheet.