CH-RES24-230VO + CH-RSH24MFC

Job Name:	**Date:**
Location:	**Approval:**
Engineer:	**Construction:**
Submitted to:	**Unit #:**
Submitted by:	**Drawing #:**
Reference:	

KEY FEATURES:

- Refrigerant Sensor
- Humidity Sensor
- GoldFin Anti-Corrosive Coating
- Multiple Fan Speeds
- Easy service
- TU1 Cooper Coil
- Can be applied horizontally from the ceiling or vertically on a wall
- Inverter technology

NOTES:





Cooper&Hunter products are subject to continuous improvements. Cooper&Hunter reserves the right to modify product design, specifications and information in this data sheet without notice and without incurring any obligations. Actual unit design may differ from images shown in this submittal sheet.

CH-RES24-230VO + CH-RSH24MFC

Indoor Model			**CH-RSH24MFC**
Power supply		V, Ph, Hz	208-230V, 1Ph, 60Hz
Communication wiring			AWG 14-4
Cooling	Capacity	Btu/h	24,000 (11,100~29,000)
	Input	w	1,967 (820~2,610)
	Rated current	A	8.6 (3.6~11.5)
	EER/EER2	Btu/w	
	SEER/SEER2	Btu/w	
Heating at 47 °F	Capacity	Btu/h	24,400 (11,800~32,600)
	Input	W	2,385 (675~2,990)
	Rated current	A	10.4 (3.7~13.1)
	COP	W/W	2.99
	HSPF4/HSPF2-4		11.1
	HSPF5/HSPF2-5		8.4
Indoor fan motor		Qty	1
		Input	90
		RLA	1
Indoor air flow (Turbo/Hi/Med/Lo) (No duct)		CFM	735.8 / 706.3 / 606.3 / 453.2
ESP (range)		In.wg.	/
Indoor noise level (Hi/Med/Lo)		dB(A)	49/45/34
Dehumidification		L/H	6.49
Indoor unit	Dimensions (WxDxH)	inch	42.05 x 26.57 x 9.25
	Packing (WxDxH)	inch	45.08 x 29.72 x 12.52
	Net/Gross weight	lbs	61.29/73.19
Drainage water pipe diameter		inch	1"
Refrigerant piping (Liquid side/Gas side)		inch	3/8"/5/8"
Design pressure		PSIG	550/340
Controller			remote controller
Room temperature	Cooling	F	60~90
	Heating	F	32~86

Cooper&Hunter products are subject to continuous improvements. Cooper&Hunter reserves the right to modify product design, specifications and information in this data sheet without notice and without incurring any obligations. Actual unit design may differ from images shown in this submittal sheet.

CH-RES24-230VO + CH-RSH24MFC

Outdoor Model			CH-RES24-230VO
Power supply		V, Ph, Hz	208-230V, 1Ph, 60Hz
Min. circuit ampacity		A	24
Max. fuse		A	25
Compressor	Model		KTM240D46UKT2
	Type		ROTARY
	Brand		GMCC
	Capacity	Btu/h	25.93
	Input	w	2.045
	Rated current (RLA)	A	15.4
	Refrigerant oil	oz	VG74 21
Outdoor fan motor	Qty		1
	Input	w	120
	RLA	A	1
	Speed	r/min	810/700/450
Outdoor air flow (Max)		CFM	2,236.7
Outdoor noise level (Max)		dB(A)	59
Throttle type			EXV+Throttle valve
Outdoor unit	Dimensions (WxDxH)	inch	37.24 x 16.14 x 31.89
	Packing (WxDxH)	inch	42.91 x 19.68 x 34.84
	Net/Gross weight	inch	122.13/132.28
Refrigerant	Type		R454B
	Precharge	ft	25
Additional charge for 1/4 inch liquid pipe		oz	/
Additional charge for 3/8 inch liquid pipe		oz	0.32
Refrigerant piping	Liquid side/Gas side	inch	3/8"/5/8"
	Max. pipe length	ft	164
	Max. difference in level	ft	82
Ambient temperature	Cooling	F	-13 ~ 122
	Heating	F	-13~75

Cooper&Hunter products are subject to continuous improvements. Cooper&Hunter reserves the right to modify product design, specifications and information in this data sheet without notice and without incurring any obligations. Actual unit design may differ from images shown in this submittal sheet.

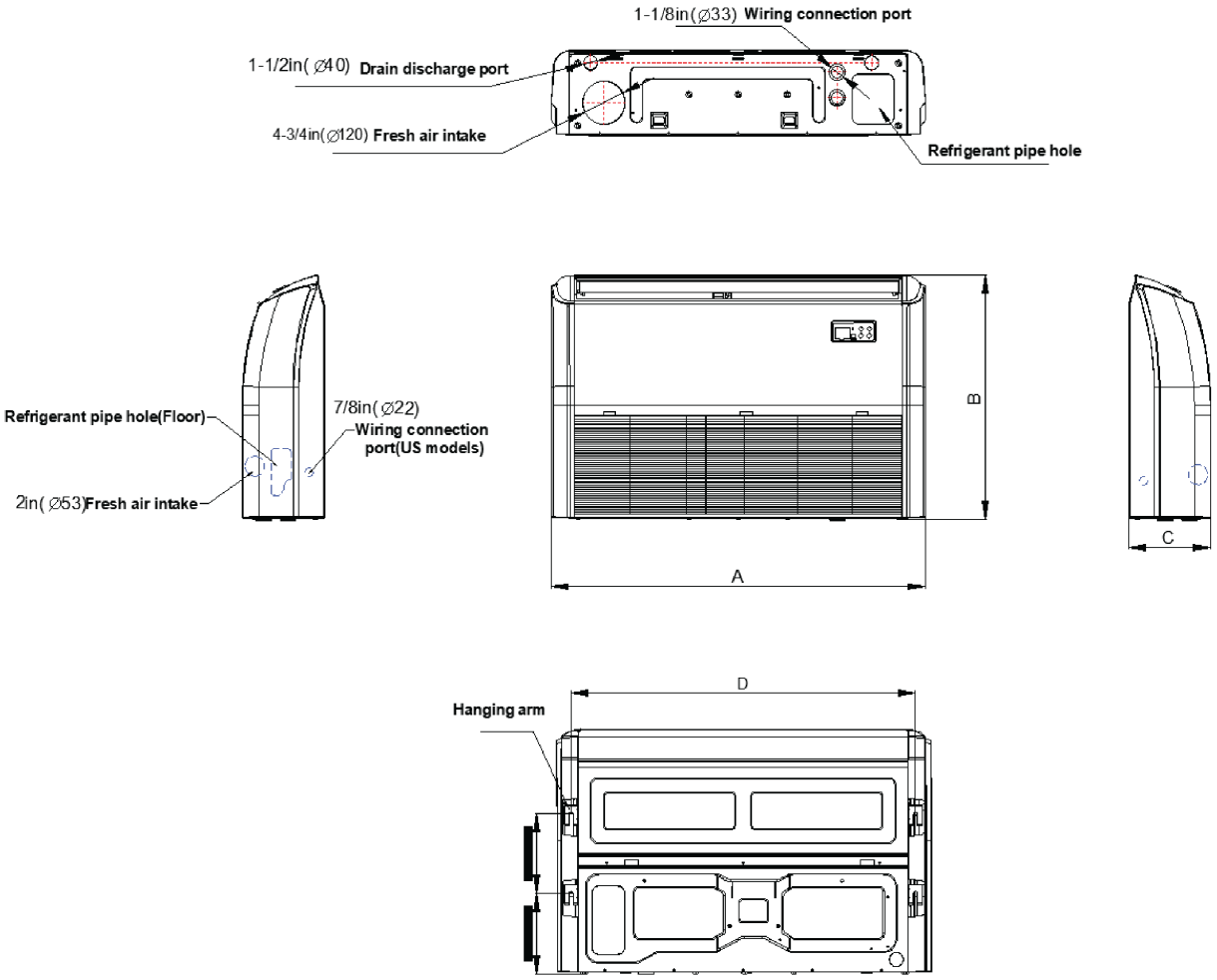

Model	A	B	C	D
18K/24K	42in(1068mm)	26-1/2in(675mm)	9-1/4in(235mm)	38-3/4in(983mm)
36K/48K/60K	65in(1650mm)	26-1/2in(675mm)	9-1/4in(235mm)	61-5/8in(1565mm)

Cooper&Hunter products are subject to continuous improvements. Cooper&Hunter reserves the right to modify product design, specifications and information in this data sheet without notice and without incurring any obligations. Actual unit design may differ from images shown in this submittal sheet.

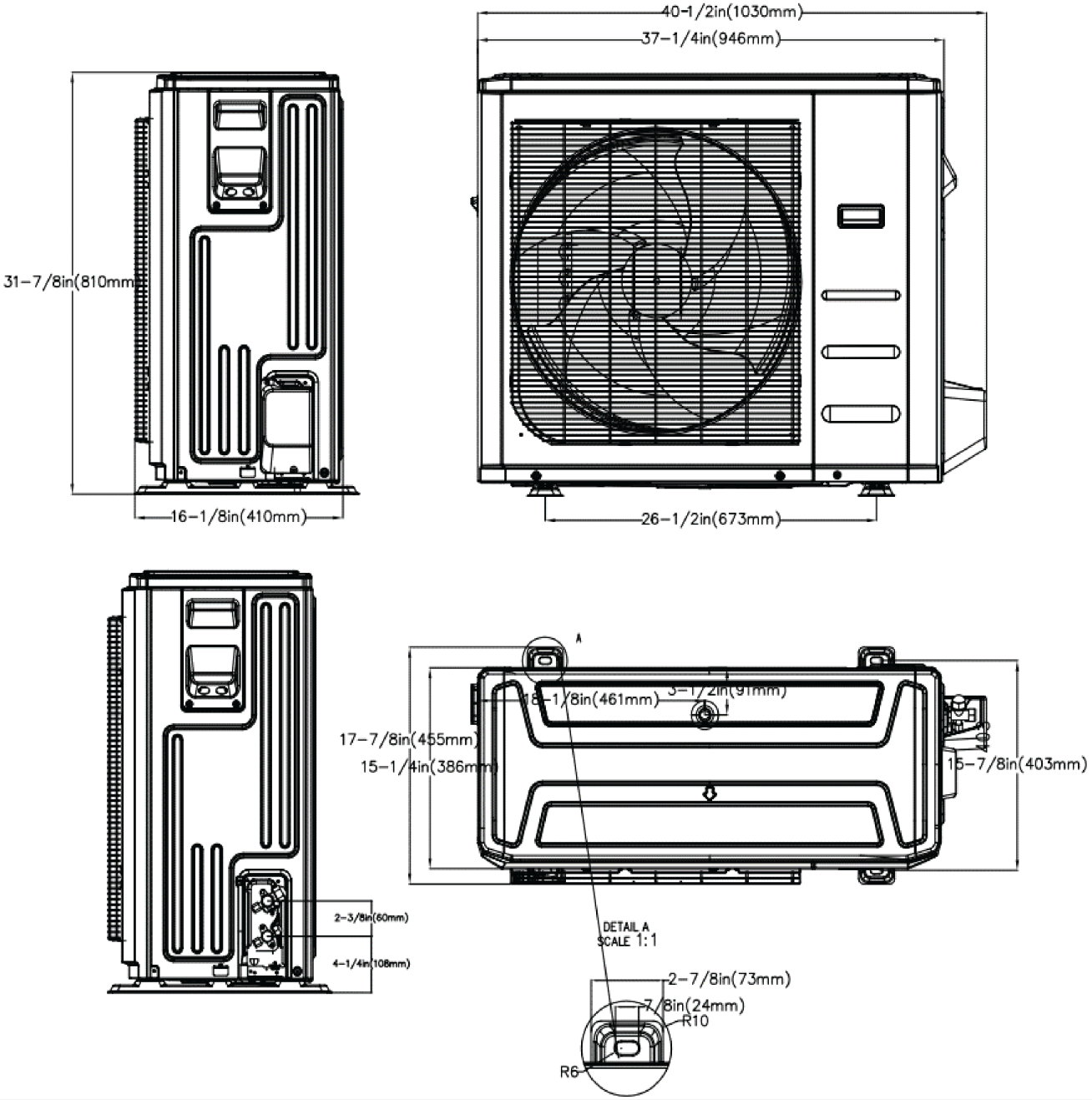

Cooper&Hunter products are subject to continuous improvements. Cooper&Hunter reserves the right to modify product design, specifications and information in this data sheet without notice and without incurring any obligations. Actual unit design may differ from images shown in this submittal sheet.