CH-RLS12MIA-115VO + CH-RLS12MIA-115VI

Job Name:	**Date:**
Location:	**Approval:**
Engineer:	**Construction:**
Submitted to:	**Unit #:**
Submitted by:	**Drawing #:**
Reference:	

KEY FEATURES:

- Auto-Swing for horizontal louvers
- Smart Kit Ready
- Turbo Mode
- Follow Me Mode
- Smart kit Included

NOTES:



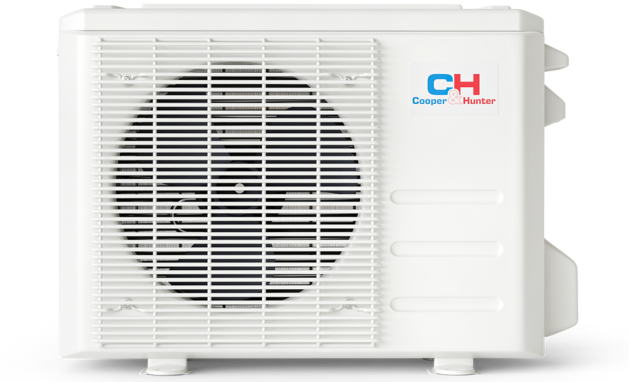

Cooper&Hunter products are subject to continuous improvements. Cooper&Hunter reserves the right to modify product design, specifications and information in this data sheet without notice and without incurring any obligations. Actual unit design may differ from images shown in this submittal sheet.

CH-RLS12MIA-115VO + CH-RLS12MIA-115VI

Indoor Model			**CH-RLS12MIA-115VI**
Power supply		V, Ph, Hz	115V, 1Ph, 60Hz
Communication wiring			AWG 14-4
Cooling	Capacity	Btu/h	12,000 (2,200~12,300)
	Input	w	1,188 (140~1,200)
	Rated current	A	12.7 (1.8~13)
	EER/EER2	Btu/w	
	SEER/SEER2	Btu/w	
Heating at 47 °F	Capacity	Btu/h	12,000 (3,400~12,200)
	Input	W	1,065 (200~1,230)
	Rated current	A	11.7 (1.1~13.2)
	COP	W/W	3.3
	HSPF4/HSPF2-4		8.7
	HSPF5/HSPF2-5		6.7
Indoor fan motor		Qty	1
		Input	20
		RLA	0.6
Indoor air flow (Turbo/Hi/Med/Lo) (No duct)		CFM	341.4 / 309 / 206 / 176.6
ESP (range)		In.wg.	/
Indoor noise level (Hi/Med/Lo)		dB(A)	40.5/32.5/25
Dehumidification		L/H	2.96
Indoor unit	Dimensions (WxDxH)	inch	31.57 x 7.44 x 11.69
	Packing (WxDxH)	inch	34.45 x 11.22 x 14.96
	Net/Gross weight	lbs	19.40/25.13
Drainage water pipe diameter		inch	5/8"
Refrigerant piping (Liquid side/Gas side)		inch	1/4"/3/8"
Design pressure		PSIG	550/340
Controller			remote controller
Room temperature	Cooling	F	60~90
	Heating	F	32~86

Cooper&Hunter products are subject to continuous improvements. Cooper&Hunter reserves the right to modify product design, specifications and information in this data sheet without notice and without incurring any obligations. Actual unit design may differ from images shown in this submittal sheet.

CH-RLS12MIA-115VO + CH-RLS12MIA-115VI

Outdoor Model			**CH-RLS12MIA-115VO**
Power supply		V, Ph, Hz	115V, 1Ph, 60Hz
Min. circuit ampacity		A	19
Max. fuse		A	20
Compressor	Model		KSN98D64UFZ3
	Type		ROTARY
	Brand		GMCC
	Capacity	Btu/h	10,570 ± 3%
	Input	w	765 ± 3%
	Rated current (RLA)	A	4.65 ± 3%
	Refrigerant oil	oz	VG74 10.1
Outdoor fan motor	Qty		1
	Input	w	34
	RLA	A	0.6
	Speed	r/min	780/600
Outdoor air flow (Max)		CFM	1,235.3
Outdoor noise level (Max)		dB(A)	54
Throttle type			Capillary
Outdoor unit	Dimensions (WxDxH)	inch	30.12 x 11.93 x 21.85
	Packing (WxDxH)	inch	34.84 x 14.76 x 23.82
	Net/Gross weight	inch	61.29/67.02
Refrigerant	Type		R454B
	Precharge	ft	25
Additional charge for 1/4 inch liquid pipe		oz	0.16
Additional charge for 3/8 inch liquid pipe		oz	/
Refrigerant piping	Liquid side/Gas side	inch	1/4"/3/8"
	Max. pipe length	ft	82
	Max. difference in level	ft	49.2
Ambient temperature	Cooling	F	5 ~ 122
	Heating	F	5 ~ 75

Cooper&Hunter products are subject to continuous improvements. Cooper&Hunter reserves the right to modify product design, specifications and information in this data sheet without notice and without incurring any obligations. Actual unit design may differ from images shown in this submittal sheet.

CH-RLS12MIA-115VO + CH-RLS12MIA-115VI

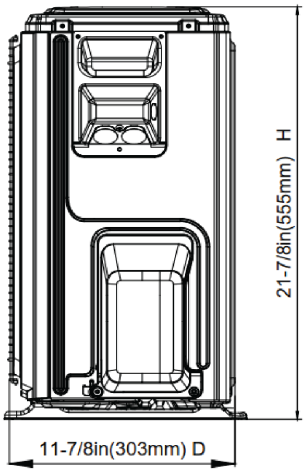

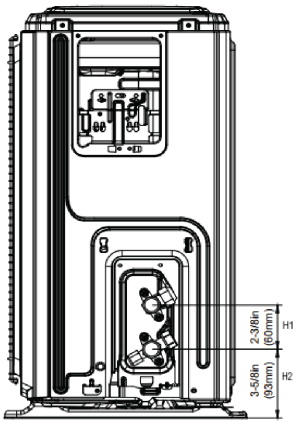

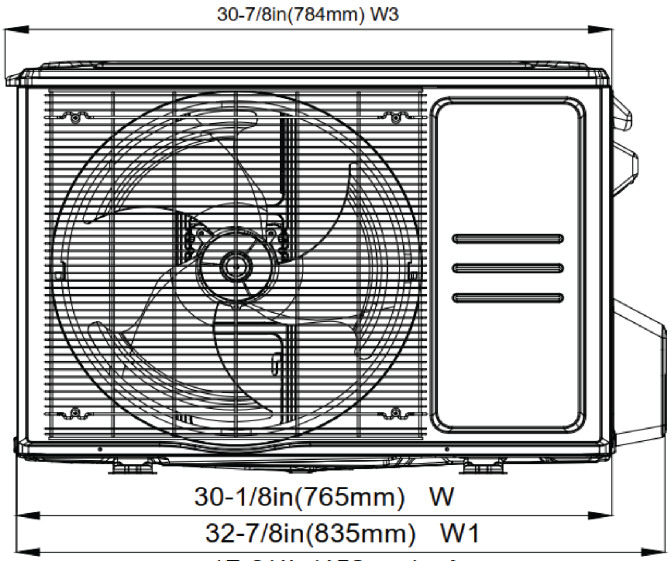

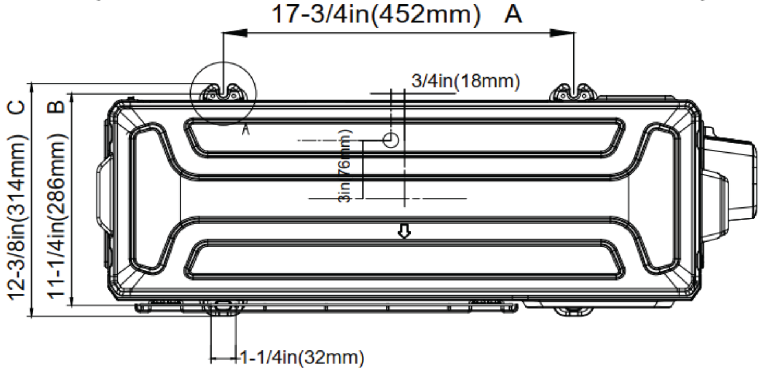

DETAIL A
SCALE 1:2

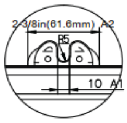

Cooper&Hunter products are subject to continuous improvements. Cooper&Hunter reserves the right to modify product design, specifications and information in this data sheet without notice and without incurring any obligations. Actual unit design may differ from images shown in this submittal sheet.

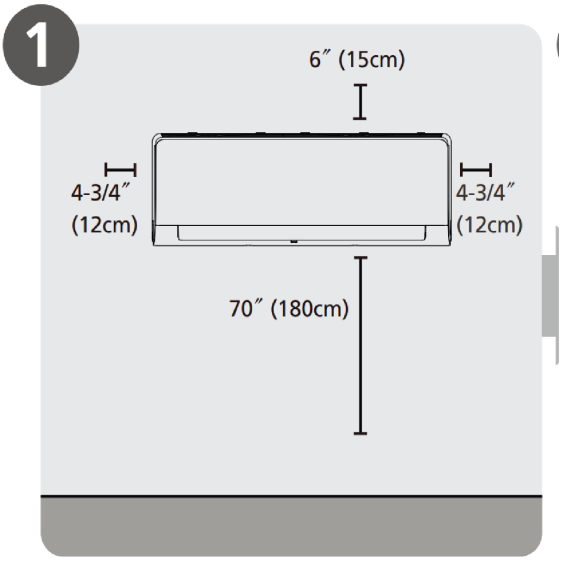

Select Installation Location

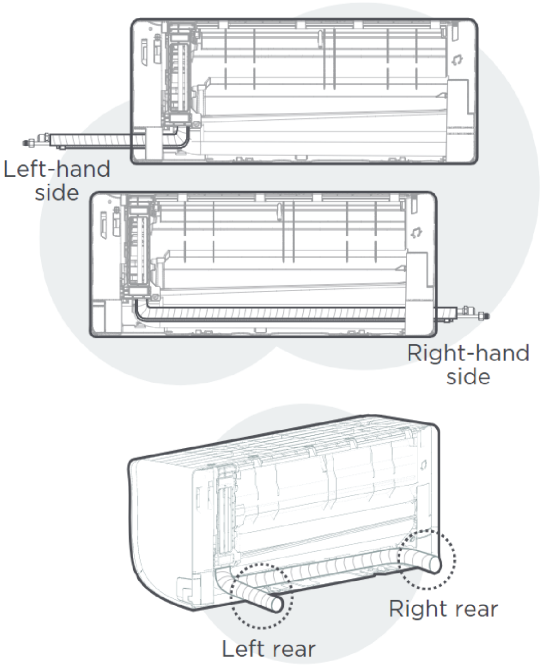

NOTE:
Based on the position of the wall hole relative to the mounting plate, choose the side from which the piping will exit the unit. You have four options for the exit direction of the piping.

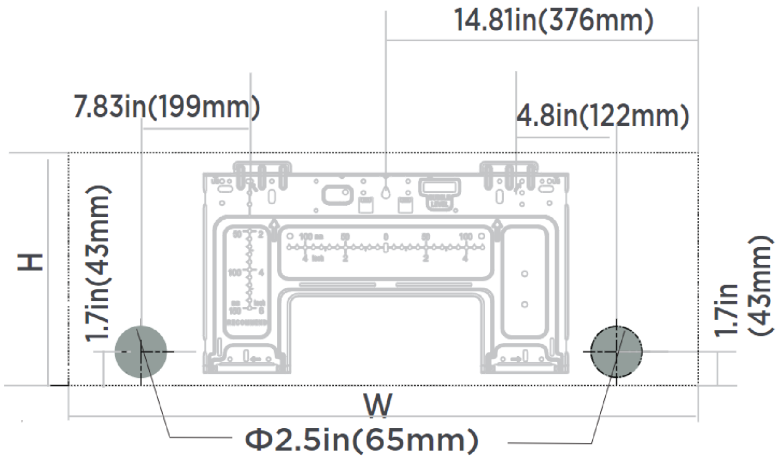

Indoor unit dimensions(WxH):
31.54in(802mm)x11.69in(297mm)

NOTE:
When the gas side connective pipe isΦ (5/8in)16mm or more, the wall hole shouldbe (3-1/2in)90mm.

Cooper&Hunter products are subject to continuous improvements. Cooper&Hunter reserves the right to modify product design, specifications and information in this data sheet without notice and without incurring any obligations. Actual unit design may differ from images shown in this submittal sheet.